MDH 500-600W

MDH 500-600W Series DC DC Isolated Converters Modules



特性 Features

- 高低电压输入可选 — High and low voltage input is for option
- 2倍电压输入 — 2times input voltage
- 最佳壳体连接方式 — Best case attaching mode
- 外形美观、散热效果好 — Good appearance, good heat dissipation
- 高可靠性、长寿命设计 — Design for high reliability,long lifetime

条件：除特殊指定外，所有参数测试条件为：室温25°C,标称输入电压，纯阻性标称负载
Condition: All specifications are tested under the room temperature 25°C, Normal input voltage and pure resistive normal load.

输入特性 Input Characteristic

额定值 (Rated)	电压范围 (Voltage Range)	额定值 (Rated)	电压范围 (Voltage Range)
24 VDC (额定值 Rated)	9-18 VDC	110 VDC (额定值 Rated)	66-154 VDC
48 VDC (额定值 Rated)	18-36 VDC	600 VDC (额定值 Rated)	400-800VDC

输出特性 Output Characteristic

电压精度 (Voltage Set-point Accuracy)	± 2%
电压调整率(主路) (Line Regulation<main>)	± 0.5%
负载调整率(主路) (Load Regulation<main>)	± 0.5%
电流限制点 (Output Current Limiting)	120%(Typ)

输出电流 (Output Current)	5-60A 任选（For option）
输出电压 (Output Voltage)	5-110V 任选（For option）
功率 (Power)	500-600W

一般特性 General Characteristic

工作频率 (Switching Frequency)	100-200KHz		环境特性 (Environmental Characteristics)	工作壳温 (Case Temperature)	（工业品）Industry -25 – +85°C （军I）Military I -40 – +85°C （军II）Military II -55 – +85°C
绝缘电阻 (Isolation Resistance)	200MΩ				
绝缘强度 (Isolation Voltage)	输入-输出 (Input-Output)	>1500VDC		存储温度 (Storage Temperature)	（工业品）Industry -45 – +105°C （军I）Military I -55 – +105°C
	输入-外壳 (Input-Case)	>1050VDC			
	输出-外壳 (Output-Case)	>500VDC			

保护特性 General Characteristic

- ★ 输入欠压保护(Input under voltage protection)
- ★ 输入过压保护(Input over voltage protection)
- ★ 过温保护(Over temperature protection)
- ★ 输出过流保护(Output over current protection)
- ★ 输出短路保护(Output short circuit protection)

	输入电压(Vdc) Input voltage	输入电压范围（Vdc） Input voltage Range	输出电压（Vdc） Output voltage	输出电流（A） Output current(A)	纹波PK-PK（mv） Ripple and noise	效率(Typ) Efficiency(Typ)	型号 Models
单路 Single Channels Output	24	18-36	12	41.6	120	88%	MDH500-24S12
	24	18-36	24	20.8	240	89%	MDH500-24S24
	48	36-72	12	41.6	120	88%	MDH500-48S12
	48	36-72	24	25	240	89%	MDH600-48S24
	110	66-154	12	41.6	120	88%	MDH500-110S12
	110	66-154	24	25	240	89%	MDH600-110S24
	600	400-800	12	41.6	120	88%	MDH500-600S12
	600	400-800	24	25	240	89%	MDH600-600S24
	600	400-800	110	5.4	400	89%	MDH600-600S110

■说明1：输出纹波噪声（峰值-峰值）采用的是87-88页附录四模块电源测试说明
Output ripple noise (Peak-Peak) is adopted the module power supply test instruction on the page 87-88.

■说明2：仅列出典型型号，其它型号，请确定功率、输入电压及输出电压，致电我公司 400-019-3997
Only typical models listed. If you need other model, please conform the power, input voltage and output voltage, then phone us +86 400-019-3997

外形尺寸以及引脚定义 Mechanical drawing and pin definition

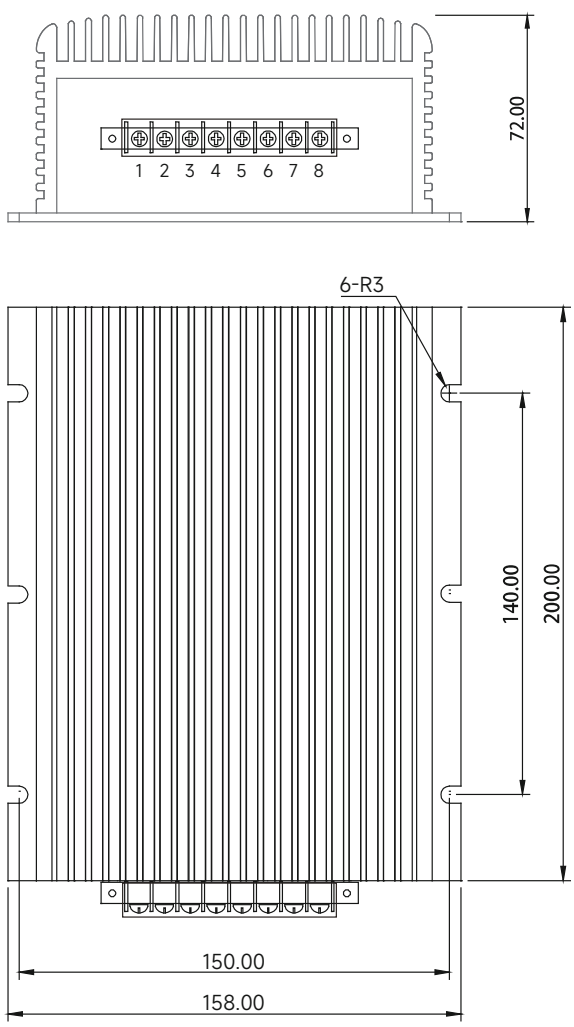

单位(Unit)：mm

引脚 PIN	单路 SING	输入≥48V SING	双路 DOU
1	+Vo	+Vo	+Vo2
2	+Vo	+Vo	-Vo2
3	-Vo	-Vo	+Vo1
4	-Vo	-Vo	-Vo1
5	+Vin	Gr.	+Vin
6	+Vin	+Vin	+Vin
7	-Vin	NC	-Vin
8	-Vin	-Vin	-Vin